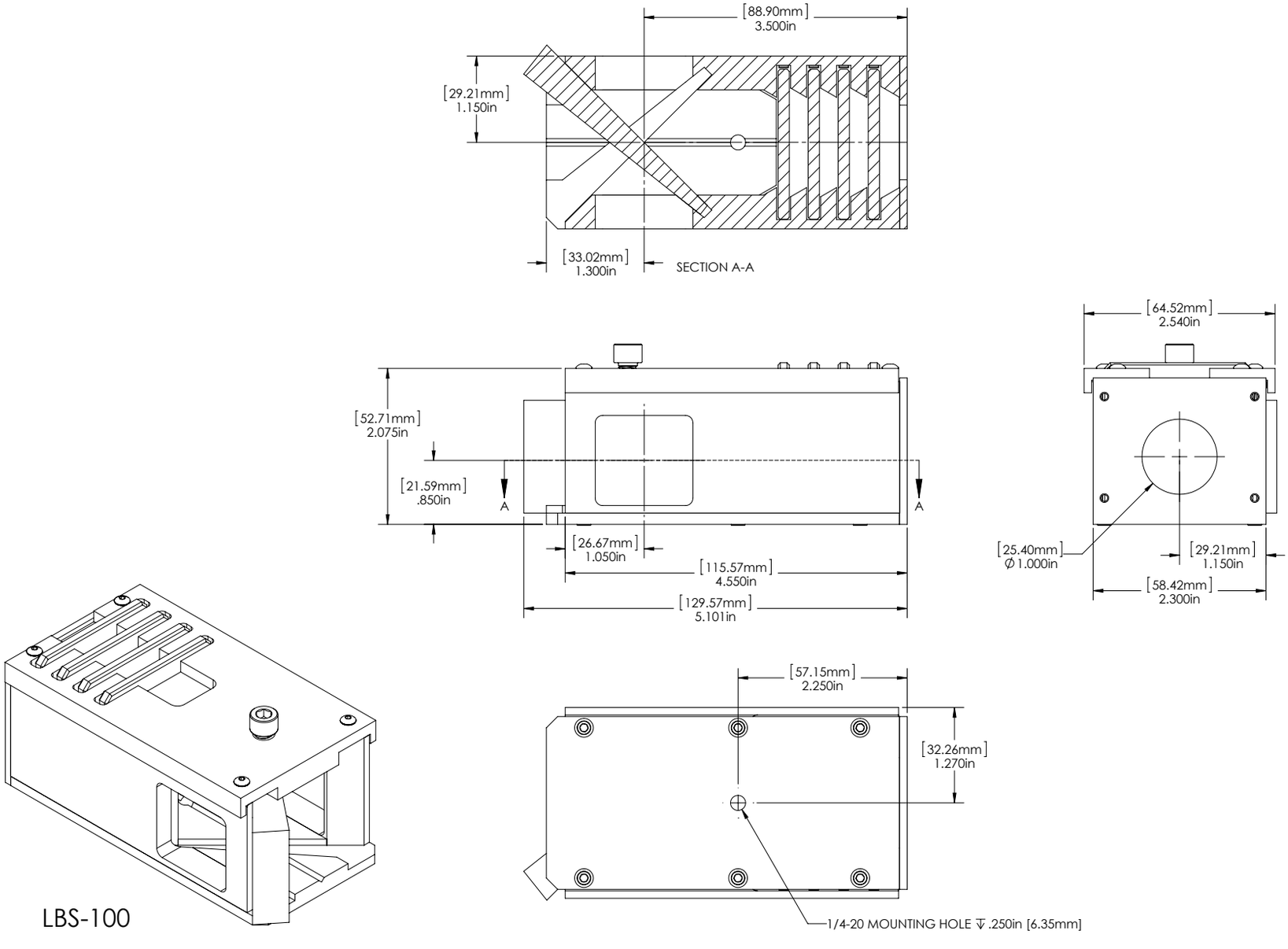
[88.90mm]
3.500in
[29.21mm]
1.150in
[33.02mm]
1.300in
SECTION A-A
[64.52mm]
2.540in
[52.71mm]
2.075in
[21.59mm]
.850in
A
A
[26.67mm]
1.050in
[115.57mm]
4.550in
[129.57mm]
5.101in
[25.40mm]
Ø 1.000in
[29.21mm]
1.150in
[58.42mm]
2.300in
[57.15mm]
2.250in
[32.26mm]
1.270in
1/4-20 MOUNTING HOLE ↧ .250in [6.35mm]
LBS-100

Ophir®